RoHS COMPLIANT

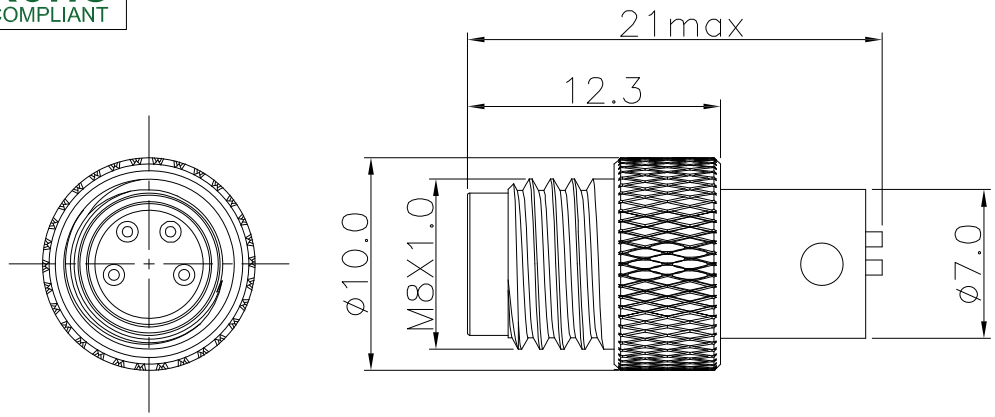

(M8I1)

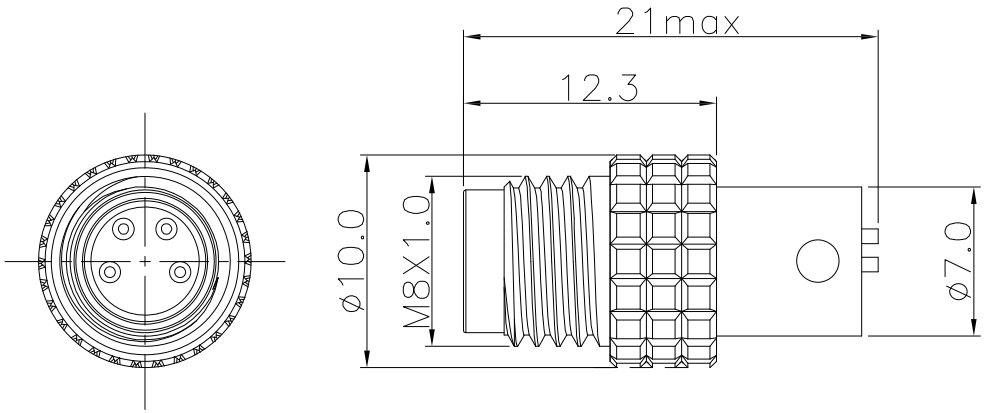

(M8I3)

1. 芯数/NO.of contacts

系列/Series	304
孔位排列/Pin Number	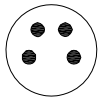
适配线缆/Conductor size	24AWG
导体直径/Pin Size	1.0mm
额定电流/Rated current	3A
额定电压/Rated voltage	30V

2. 绝缘体型号/Insulator Coded

Coded	A
型号	

3. 技术特性/Technical Characteristics

1. 寿命/Durability: >1000 mate/unmate cycles
2. Pin接触电阻/Pin Contact Resistance:≤10mΩ
3. 绝缘电阻/Nsulation Resistance:≥100MΩ
4. 温度等级/Rated Temperature:-25℃~+80℃
5. 盐雾/Corrosion Resistance:Salt spray test,>48H
6. 防水等级/Waterproof:IP67

4	屏蔽壳/Shield Shell:,黄铜镀镍/Brass,Nickel plated
3	外壳/Outer Shell:黄铜镀镍/Brass,Nickel plated
2	公针芯/PIN:黄铜镀金/Brass,G/F
1	绝缘体/Insulator:PA BLACK
序号 ITEM	名称&规格/Name & Description

MARK	REVISION DESCRIPTION	SIGNATURE	DATE
A03			
A02			
A01			

TOLERANCE
X.X ±0.20
X.XX ±0.10
X.XXX ±0.05
Angle ±2°

TITLE:
浮动式插头
M8I1304AMABG1

UNIT:mm | SCALE:N/A

DRAWN: ARTON 2021.03.10
CHECKED:
APPROVED:
SHEET:1/1 | PROJECTION

KONNRA 东莞市康瑞电子有限公司
DongGuan Konnra Electronics Co.,Ltd.
PART NO.:QZ000540
REV.:A01 | DRAWING NO.:QZ000540-S