RoHS COMPLIANT

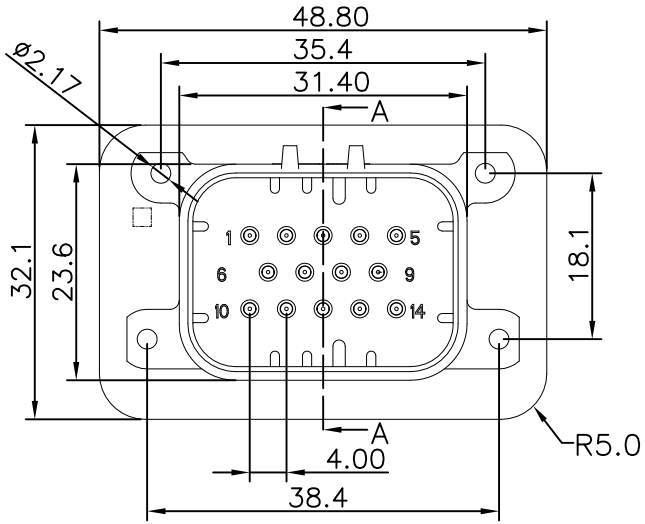

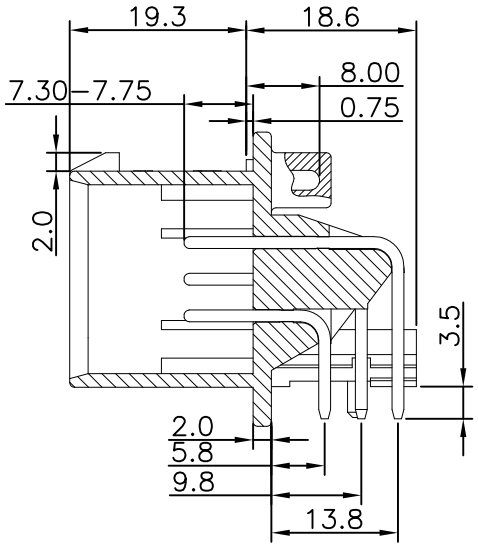

SECTION A-A

SPECIFICATIONS
1. Current rating: 3A AC, DC
2. Temperature range: -40°C ~ +105°C
3. Insulation resistance: 100MΩ min.
4. Withstanding voltage: 1000V AC/ minute.
5. Contact resistance: 5mΩ max.

Material:
Housing: UL 94V-0 PBT BLACK
Contact:Brass / Tin plating

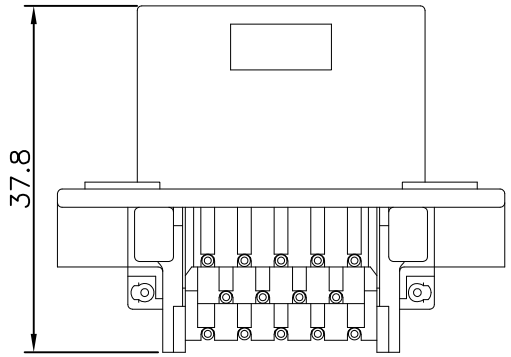

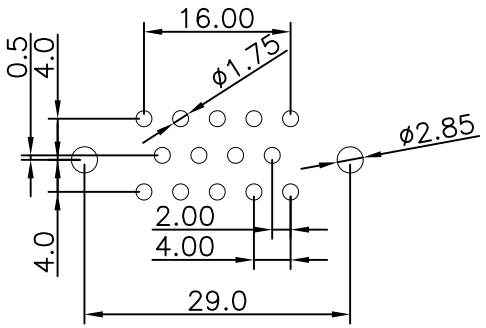

Recommended P.C.B. Layout

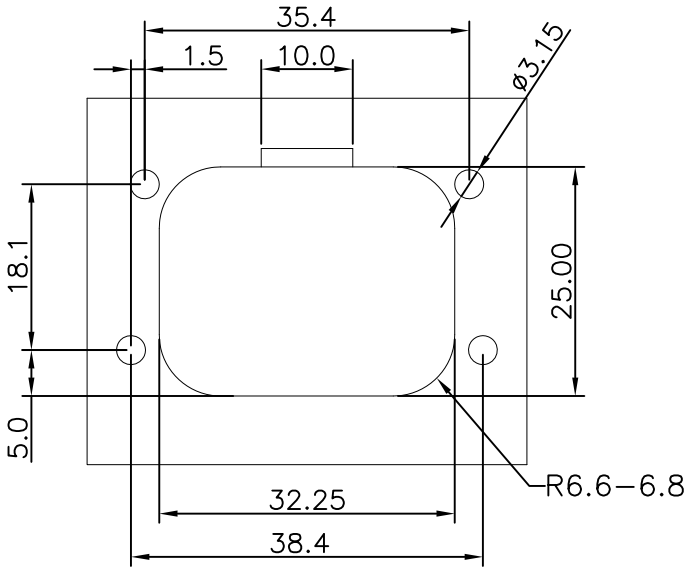

Recommended Mounting Hole Layout

MARK	REVISION DESCRIPTION	SIGNATURE	DATE
A03			
A02			
A01			

TOLERANCE
X.X ±0.30
X.XX ±0.20
X.XXX ±0.10
Angle ±2°

TITLE:
Pitch 4.0 90°
Pin Connector

UNIT:mm | SCALE:1:1

DRAWN: LCC 2024.07.23
CHECKED:
APPROVED:
SHEET:1/1 | PROJECTION

KONNRA 东莞市康瑞电子有限公司
DongGuan Konnra Electronics Co.,Ltd.
PART NO.:C4004RD01405T0101BA
REV.:A01 | DRAWING NO.:4004WFRD001-A-S