RoHS COMPLIANT

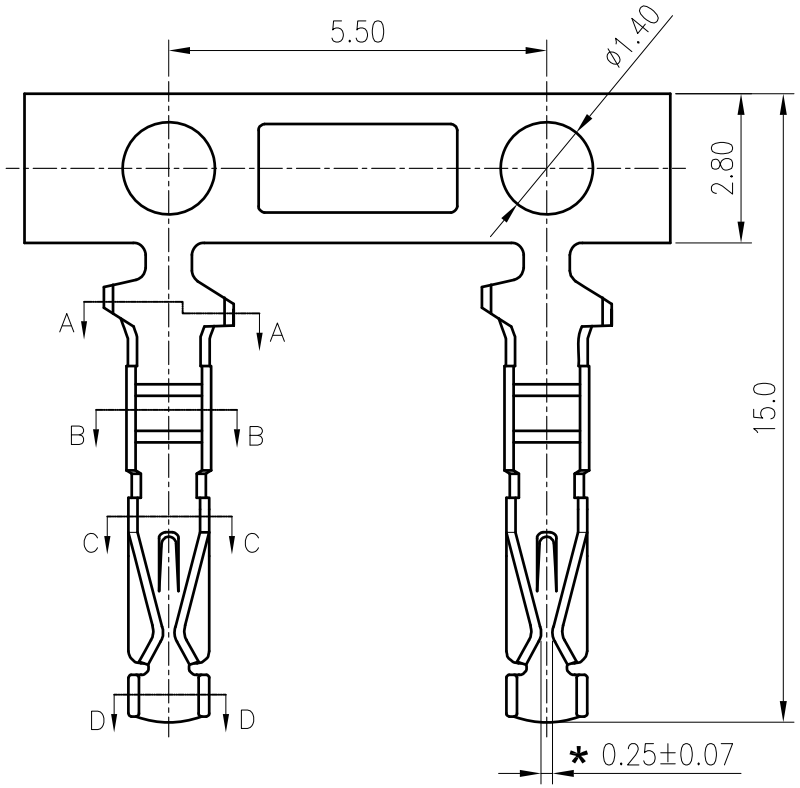

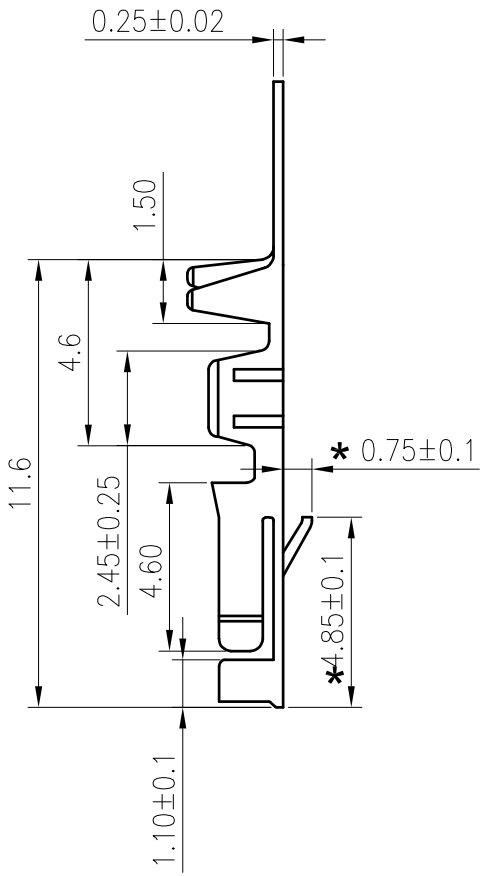

SPECIFICATIONS
1. Current rating: 3A AC, DC
2. Voltage rating: 250V AC,DC
3. Temperature range: -40°C ~ +105°C
4. Insulation resistance: 1000MΩ Min.
5. Withstanding voltage: 1500V AC/ minute.
6. Contact resistance: 20mΩ Max.

Applicable Wires:
AWG#22~#28
Insulation O.D. : 1.60mm MAX
Material: Phosphor Bronze
Plating: Tin plated over nickel
Suitable KR2545 series housing
Q'ty/reel: 10,000 PCS

Ordering Code:
T2545FP *** 01A
T01:Tin plated
B01:Selective gold flsh

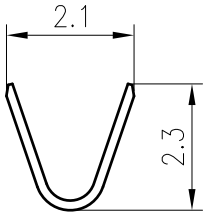

SEC: A-A

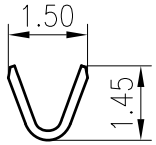

SEC: B-B

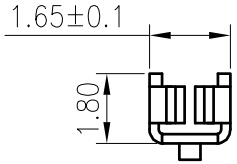

SEC: C-C

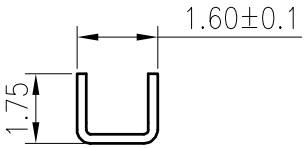

SEC: D-D

MARK	REVISION DESCRIPTION	SIGNATURE	DATE
A4			
A3			
A2	Uniformly arrange the drawings	LJT	2020.05.20

TOLERANCE
X.X ±0.30
X.XX ±0.20
X.XXX ±0.10
Angle ±2°

TITLE: HRS 2.54 Male Terminal

UNIT:mm | SCALE:N/A

DRAWN: Liujingtian 2020.5.20
CHECKED:
APPROVED:
SHEET:1/1 | PROJECTION

KONNRA 东莞市康瑞电子有限公司
DongGuan Konnra Electronics Co.,Ltd.

PART NO.:T2545FP***01A
REV.:A2 | DRAWING NO.:2545T101-A-S