RoHS COMPLIANT

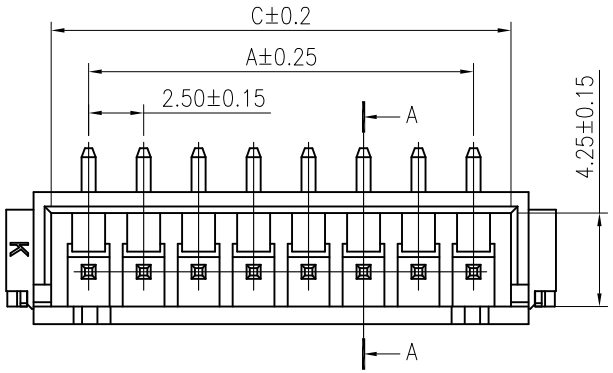

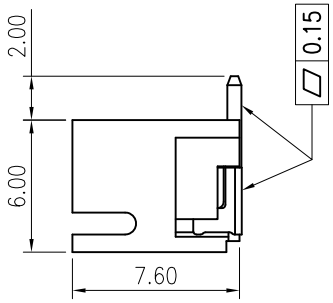

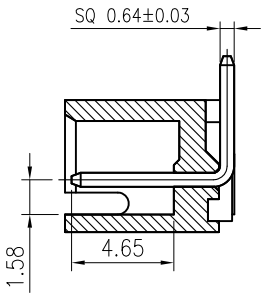

SECTION A–A

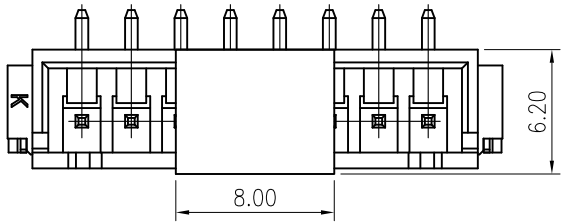

WITH COVER

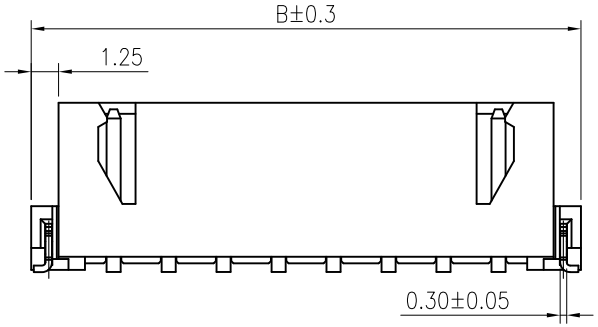

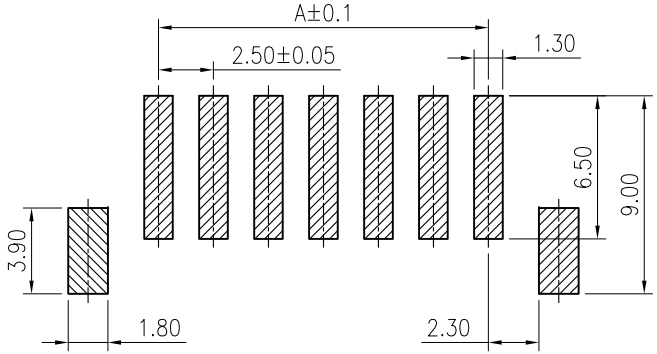

Recommended P.C.Board Layout

◆SPECIFICATIONS
- Current rating: 3A AC, DC
- Voltage rating: 250V AC,DC
- Temperature range: -40°C ~ +105°C
- Insulation resistance: 1000MΩ Min.
- Withstanding voltage: 1000V AC/ minute.
- Contact resistance: 20mΩ Max.

Material:
Insulator: Nylon 9T/LCP UL 94V-0
Contact: Brass
Solder Nail: Brass
Plating: Tin plated over Nickel
Circuits: 2~16
Mates: KR2501 series Housing

Ordering code:

C2501VS1**11M0111RA
102:2P
116:16P
11=PA9T Natural

CKT.	Dimension		
	A	B	C
02	2.50	10.00	5.90
03	5.00	12.50	8.40
04	7.50	15.00	10.90
05	10.00	17.50	13.40
06	12.50	20.00	15.90
07	15.00	22.50	18.40
08	17.50	25.00	20.90
09	20.00	27.50	23.40
10	22.50	30.00	25.90
11	25.00	32.50	28.40
12	27.50	35.00	30.90
13	30.00	37.50	33.40
14	32.50	40.00	35.90
15	35.00	42.50	38.40
16	37.50	45.00	40.90

LTR	REVISION DESCRIPTION	SIGNATURE	DATE
A2	Uniformly arrange the drawings	ZSZ	2021.09.22
A1	Release of new drawings	Cai	2020.08.21

TOLERANCE
X.X ±0.30
X.XX ±0.20
X.XXX ±0.10
Angle ±2°

TITLE: XH2.5 SMT 180° WF B Type

UNIT:mm | SCALE:N/A

DRAWN: Arwin 2021.09.22
CHECKED:
APPROVED:
SHEET:1/1 | PROJECTION

KONNRA 东莞市康瑞电子有限公司
DongGuan Konnra Electronics Co.,Ltd.

PART NO.:C2501VS***11M0111RA
VER.:A2 | DRAWING NO.:2501WVS11-A-S